1

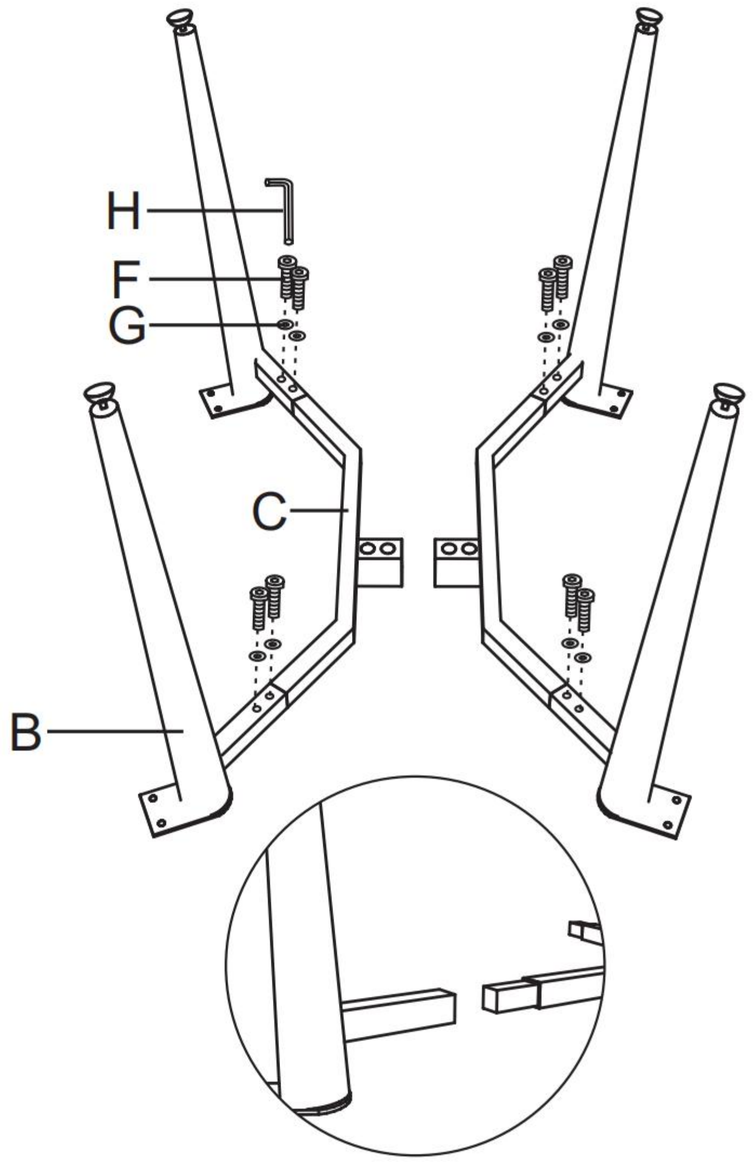

2

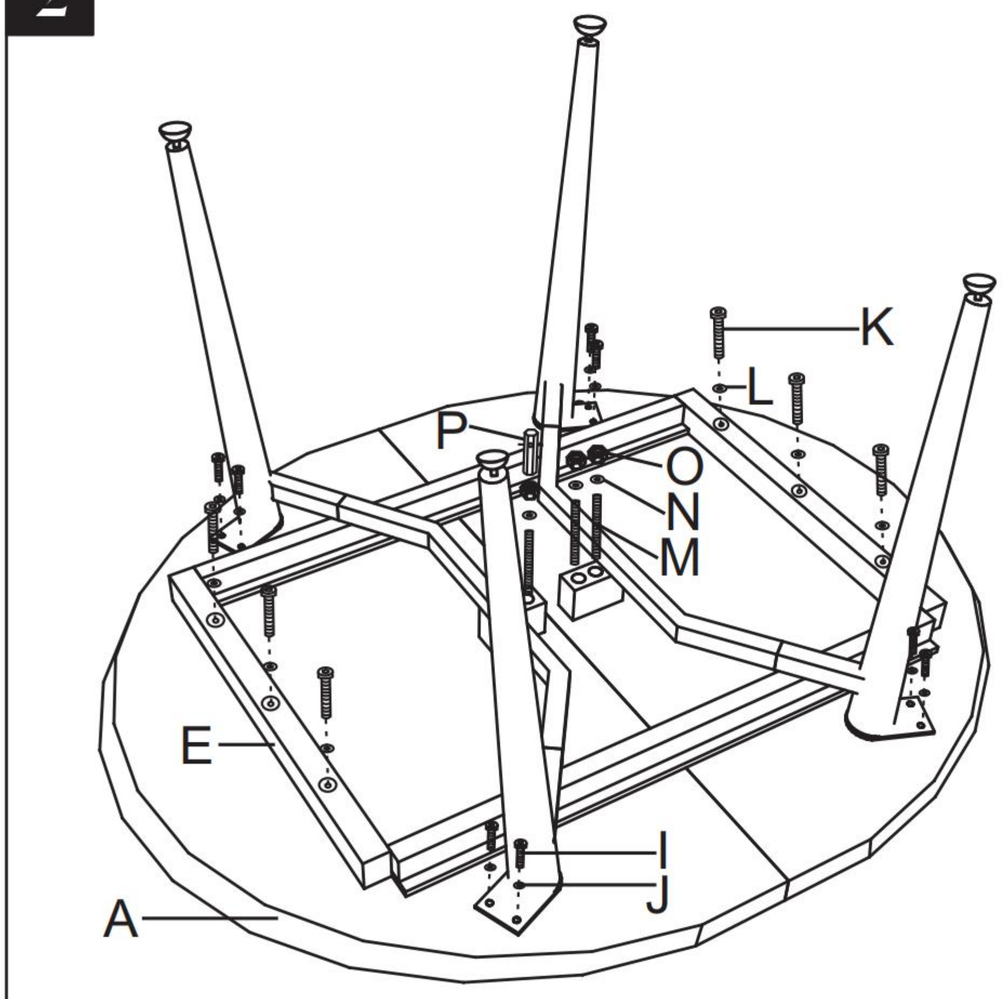

3

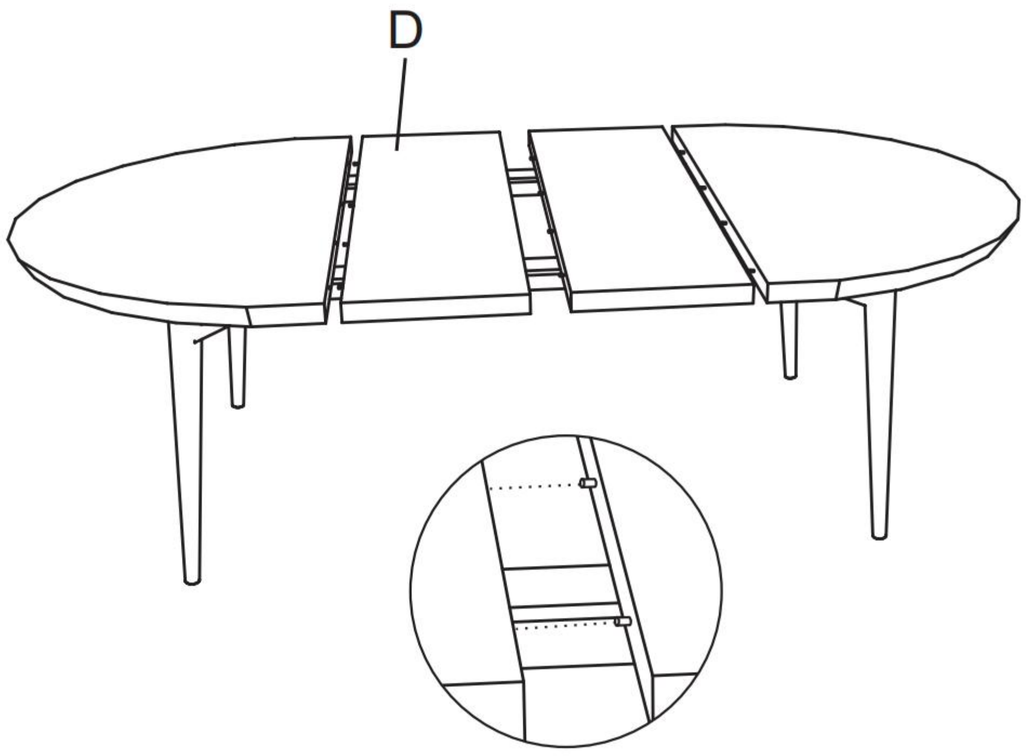

4

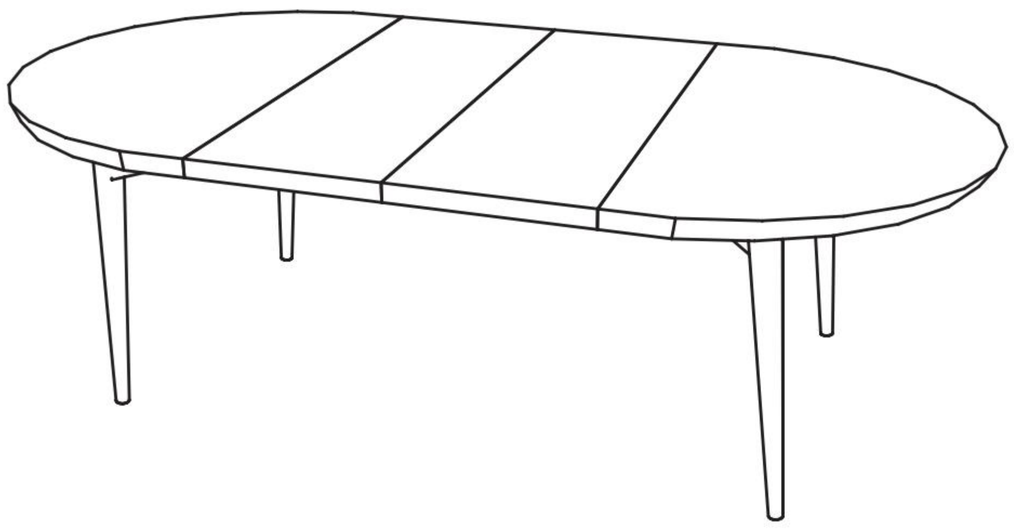

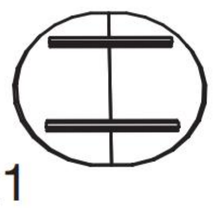 Ax1	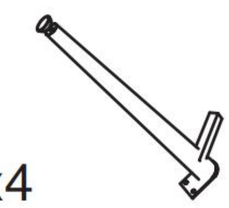 Bx4	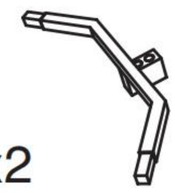 Cx2	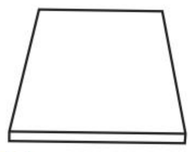 Dx2	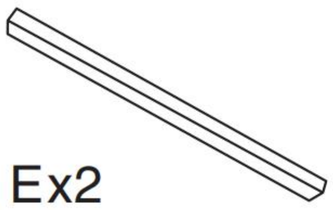 Ex2	Fx8
Gx8	Hx1	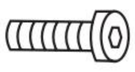 Ix8	Jx8	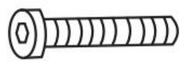 Kx6	Lx6
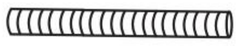 Mx4	Nx4	Ox4	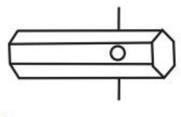 Px1		